Year 1 - Addition — Lesson Guide

Step 1

$9 + 4 =$ ☐

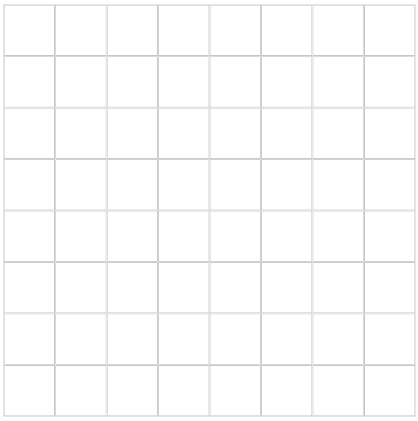

The plus sign tells us to add. When we add more, the number gets bigger. We circle the plus sign.

Step 2

$9 + 4 =$ ☐

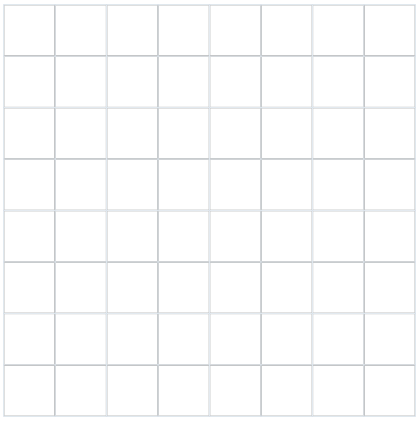

We're adding 4, so we count on 4. Each jump takes us one number to the right.

Step 3

$9 + 4 =$ ☐

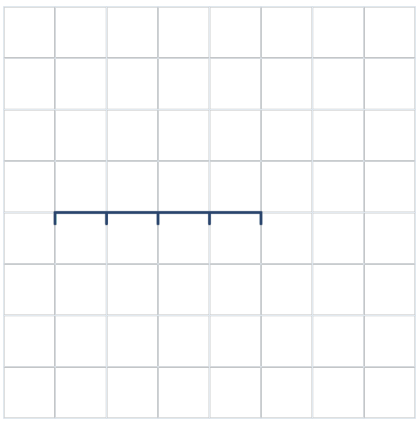

Draw a straight line and make a mark at the left end for the start. Make 4 equal spaces to the right, with a mark at the end of each space. Each space is one jump.

Step 4

9 + 4 = ☐

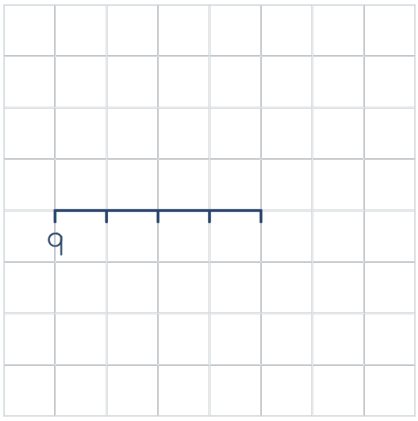

Remember: Count the jumps, without counting the starting number as a jump.

Write 9 under the left end. That's our starting number.

Step 5

9 + 4 = ☐

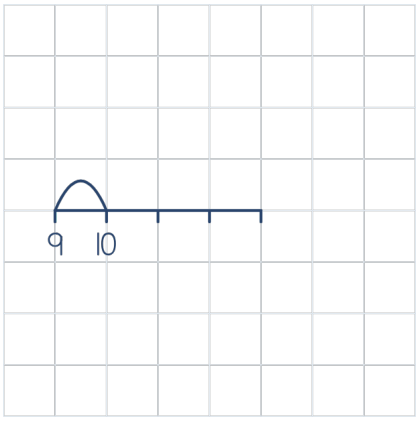

The first jump takes us from 9 to 10.

Step 6

9 + 4 = ☐

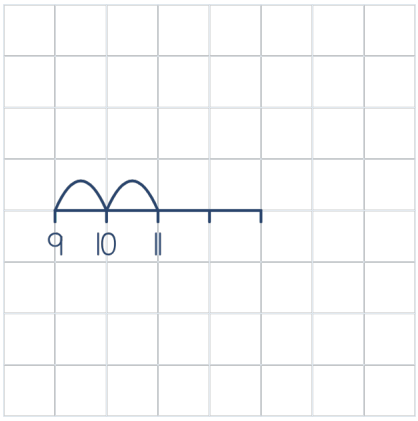

The next jump takes us from 10 to 11.

Step 7

9 + 4 = ☐

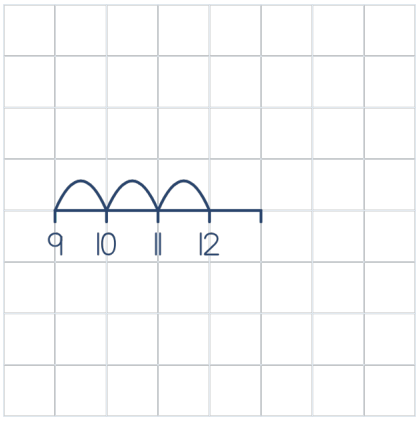

The next jump takes us from 11 to 12.

Step 8

9 + 4 = ☐

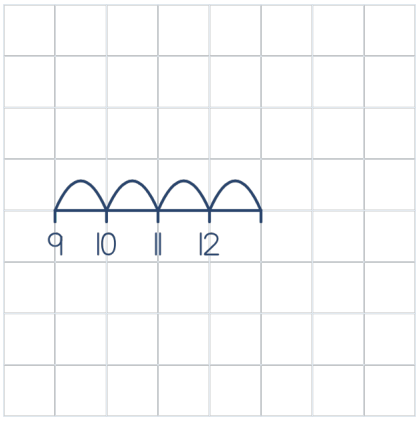

The next jump takes us from 12 to 13.

Step 9

9 + 4 = ☐

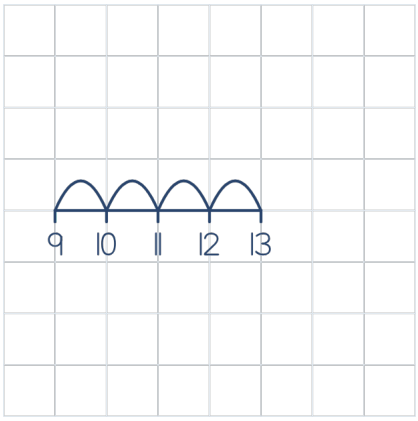

Write 13 under the place where we land.

Step 10

9 + 4 = ☐

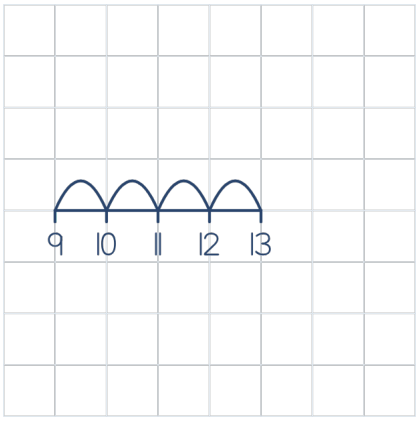

Check the number line. There should be 4 jumps to the right, one space for each jump.

Step 11

9 + 4 = 13

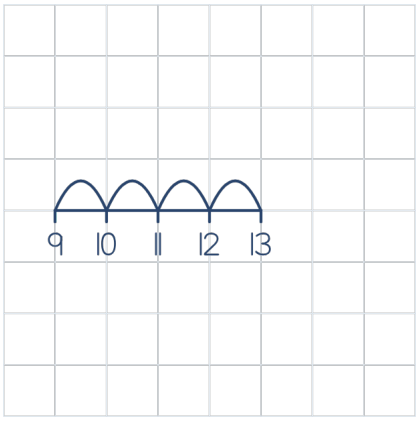

We started at 9 and counted on 4. We landed on 13. Write 13 in the answer box. 9 add 4 equals 13.